Setting values

permissible axial clearance of deep-groove ball bearing	mm	0
permissible axial clearance of output gear	mm	0,02 ± 0,06

Special tools

406 589 04 15 00

425 589 06 43 00
26 B

343 589 00 40 00
01 26 28

Expendable materials

Cons. No.	Designation	Part Number
2	Sealing compound: Omnifit FD 10	002 989 00 20 10
3	Lubricant: Long-term grease	000 989 63 51
6	Lubricant: Optimal Paste white T	000 989 80 51

Front axle drive – Tightening torques

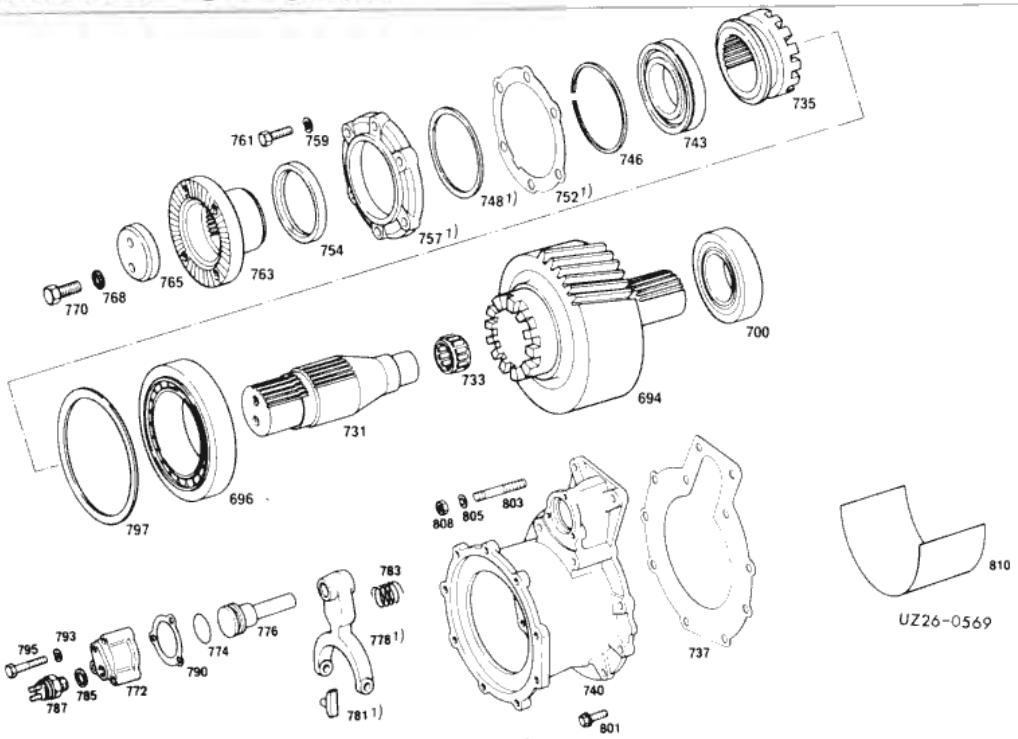

Cons. No.	Designation	Thread strength	Nm
801	Mounting of intermediate housing	M 10 x 40 – 10.9	63
		M 10 x 85 – 8.8	45
770	Mounting of drive flange	M 12 x 1,5 x 30 – 8.8	75

© Daimler AG, 10.05.16, G/07/13, ra2615ug20301z, 15-3.1 - Disassembly and assembly of the front-axle drive - Transmission (UG 3/65), auxiliary transmission (NG 3/65) ... Страница 1 из 4

26G26 **Disassembly and assembly**

26/62 **1** Clamp transmission into assembly stand.

26/63 **2** Support front axle take-off and remove retaining disc.

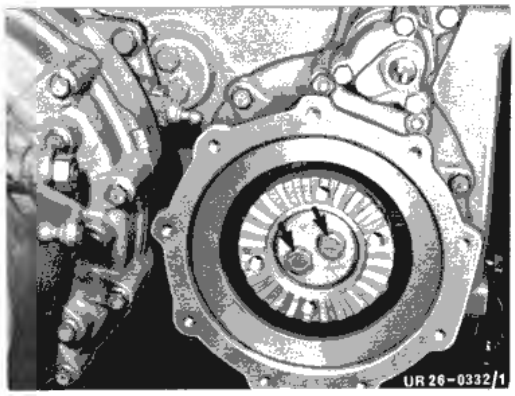

26/64 **3** Press off flange.

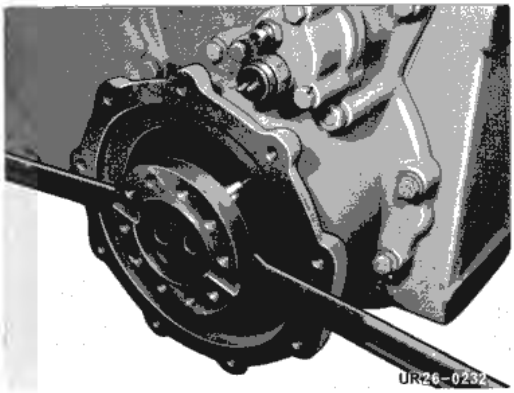

26/67 **4** Remove intermediate housing.

26H6 **Note:** Pay attention to spacer washers and compression spring.

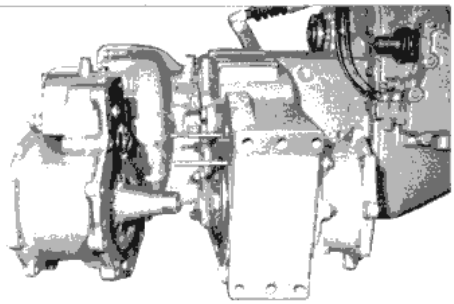

UR26-1183

26/73 **5** Detach shift cylinder.

26/74 **6** Remove shift piston.

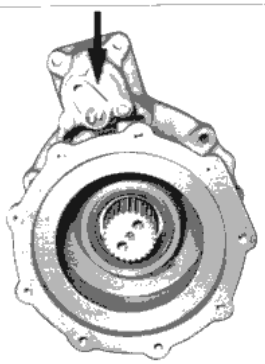

UR26-1180/1

© Daimler AG, 10.05.16, G/07/13, ra2615ug20301z, 15-3.1 - Disassembly and assembly of the front-axle drive - Transmission (UG 3/65), auxiliary transmission (NG 3/65) ... Страница 2 из 4

26/75 **7** Remove drive shaft and detach compression spring.

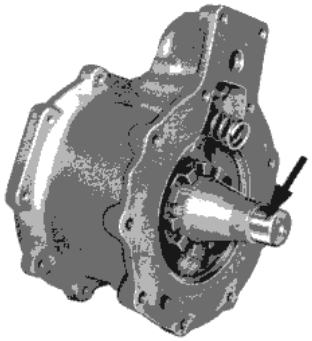

UR26-1179/1

26/76 **8** Remove selector dog and selector fork.

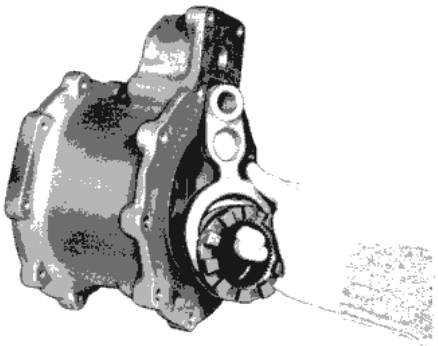

UR26-1178

26/77 **9** Remove shaft sealing ring.

26/78 **10** Remove shaft seal.

01/25 **11** Clean all parts, check, exchange as required.

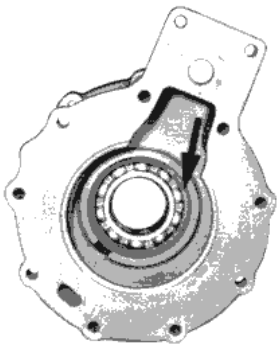

UR26-1181/1

26/1306 **12** The assembly takes place in the same manner in reverse sequence, at the same time the following must be observed:

26/79 – Coat control piston with lubricant no. 6 and join to sealing ring.

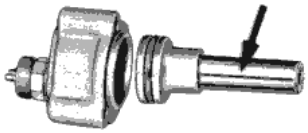

UR26-1182/1

© Daimler AG, 10.05.16, G/07/13, ra2615ug20301z, 15-3.1 - Disassembly and assembly of the front-axle drive - Transmission (UG 3/65), auxiliary transmission (NG 3/65) ... Страница 3 из 4

26/95 – Fit shift cylinder with gasket.

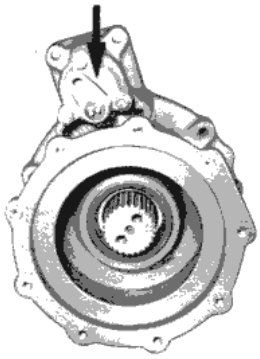

UR26-1180/1

26/1077 – Fit gasket and measure tapered roller bearing.
Permissible axial clearance 0,05 ± 0,03 mm.
343 589 00 40 00

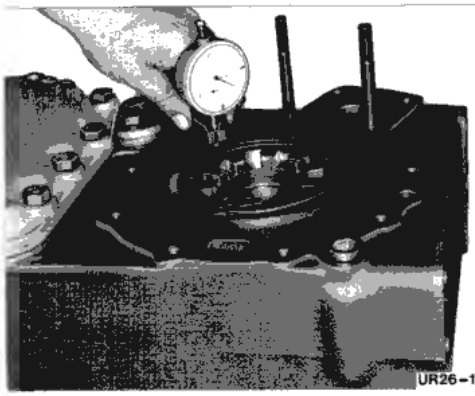

UR26-1751

26/1076 – Fit intermediate housing.

Permissible tightening torques

M 10x40	63 Nm
M 10x85	45 Nm

26H8 **Note:** Pay attention to shim rings, pressure spring and gasket.

26/2187 – Coat shaft seal in intermediate housing with lubricant no. 3 and install.
406 589 04 15 00
425 589 06 43 00

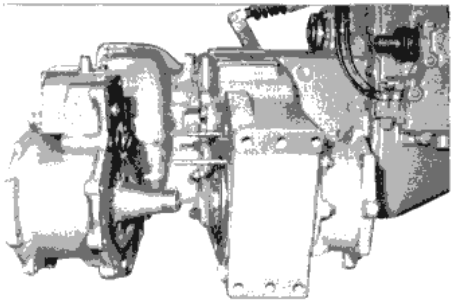

UR26-1183

26/90 – Mount output flange, coat retaining disc with sealing compound no. 2 and tighten with bolts and locking washers.

26/2176 permissible tightening torque 75 Nm

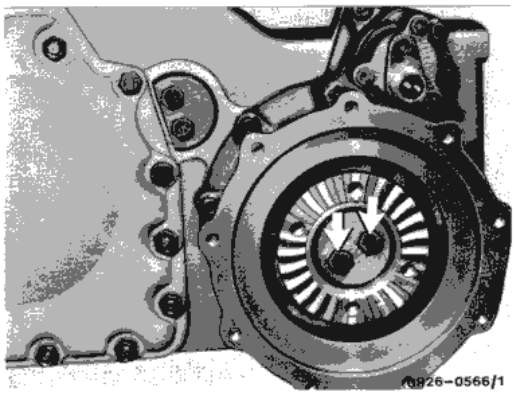

GB26-0566/1

© Daimler AG, 10.05.16, G/07/13, ra2615ug20301z, 15-3.1 - Disassembly and assembly of the front-axle drive - Transmission (UG 3/65), auxiliary transmission (NG 3/65) ... Страница 4 из 4