Technical data

Nozzle clearance to lower edge of cylinder head	mm	1,8 to 2,5

Special tools

000 589 75 09 00
07

346 589 00 07 00
07

352 589 00 33 00
07

Expendable materials

Cons. No.	Designation	Part Number
3	Sealing compound: Loctite 221	002 989 69 71

Cylinder head – Tightening torques

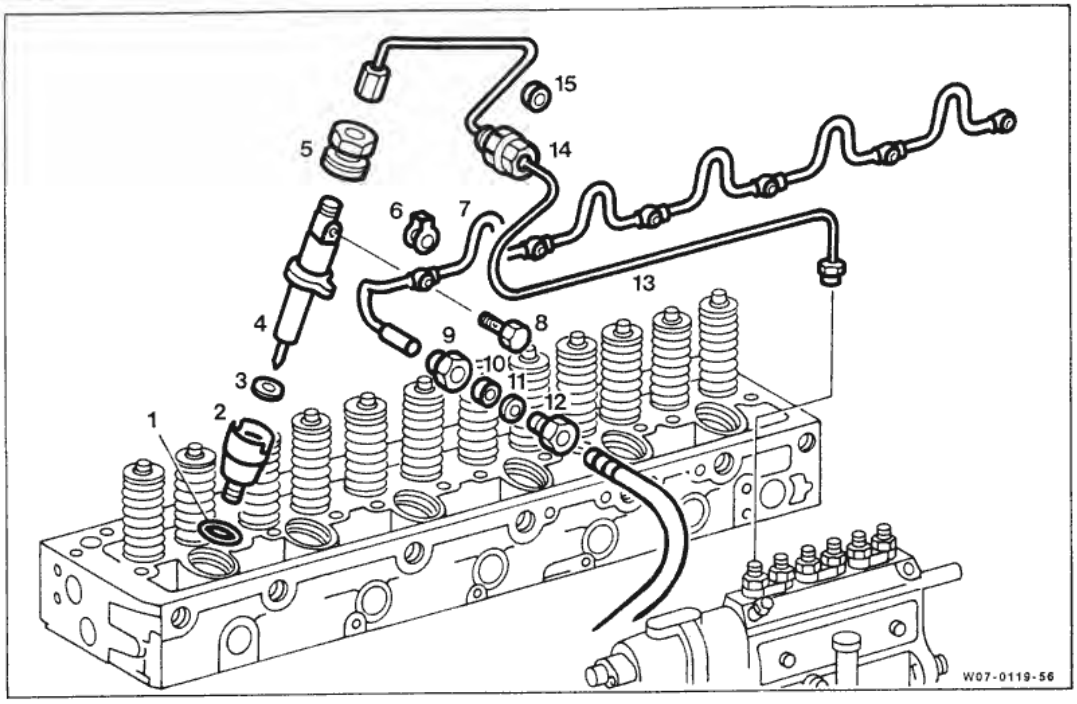

Cons. No.	Designation	Thread	Nm
2	Protective sleeve for nozzle holder in cylinder head	M 14	50 to 60
5	Nozzle holder in cylinder head, thrust bolt	M 34	60 to 70
9/12	Pressure and leakage line to cylinder head	M 16/22	10
8	Leakage line to nozzle holder	M 8	20
–	Stud to cylinder head	M 10	15 ± 5
–	Exhaust manifold to cylinder head	M 10	30
–	Exhaust manifold to cylinder head, 2-hole metal strap	M 10	25

© Daimler AG, 20.04.16, G/07/13, ra0102um10501z, 2-5.1 - Disassembly and assembly of the cylinder head - Engine 300 - Unimog 418/427/437

X3 **Disassembly**

01H001 **Note:** Engine removal is similar for all engines.

01/120 **1** Removing cylinder head, see **4.1/1** (N 03).

01/121 **2** Place cylinder head on suitable support.

01H36 **Important!**
Cylinder head must not rest on injection nozzle.

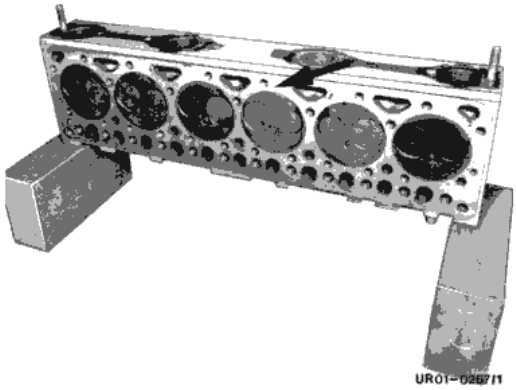
UR01-0267/1

01/125 **3** Detach leak-off lines.

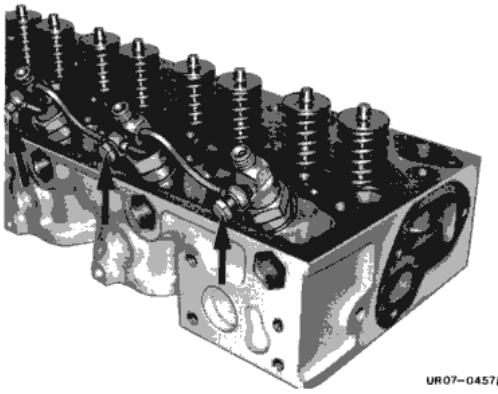
UR07-0457/1

01/126 **4** Remove thrust bolt for nozzle holder.
000 589 75 09 00

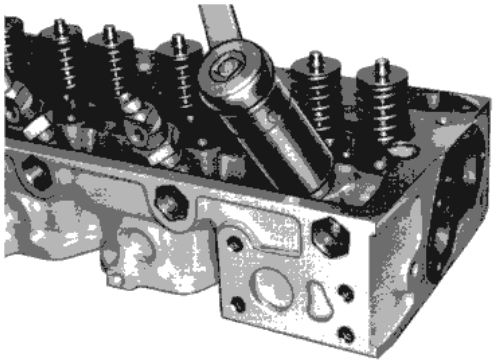
UR07-0458

01/127 **5** Remove nozzle holder.
352 589 00 33 00

01/128 **6** Remove valves, see 05.2 – **2.1/1** (H 10).

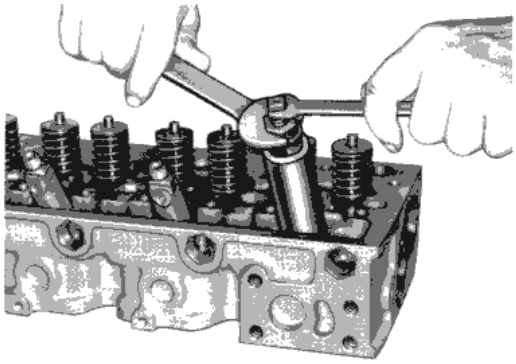
UR07-0459

© Daimler AG, 20.04.16, G/07/13, ra0102um10501z, 2-5.1 - Disassembly and assembly of the cylinder head - Engine 300 - Unimog 418/427/437

01/129 **7** Remove protective sleeve.

346 589 00 07 00

01/025 **8** Clean all parts, check, exchange as required.

01/130 **9** Check valve guides and exchange if necessary, see **6.1/1** (B 05).

01/131 **10** Check valve seats and machine or renew if necessary, see **6.1/1** (B 05) or **6.2/1** (G 05).

01/132 **11** Check injection nozzles, see 07.2 – **4.2/1** (L 13).

01/133 **12** Check cylinder head, renew if necessary.

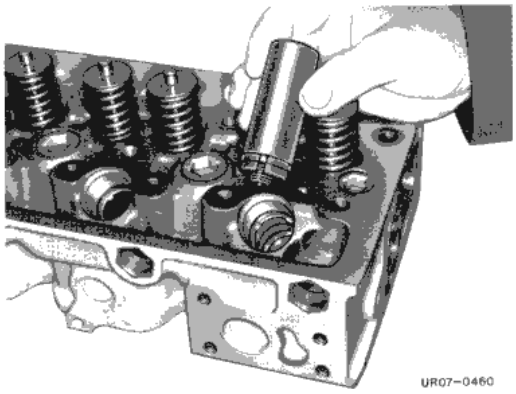

01/553 **13** The cylinder head is fitted with shortend valve guides. If necessary the valve stem seal can be retrofitted.

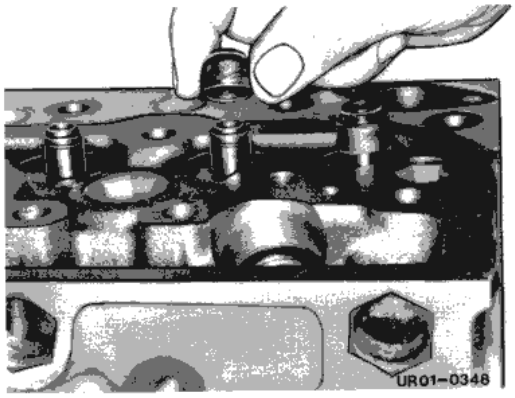

X4 **Assembly**

01/134 **1** Insert new sealing ring for protective bushing into cylinder head.

01/138 **2** Install valves, see 05.2 – **2.2/1** (L 10).

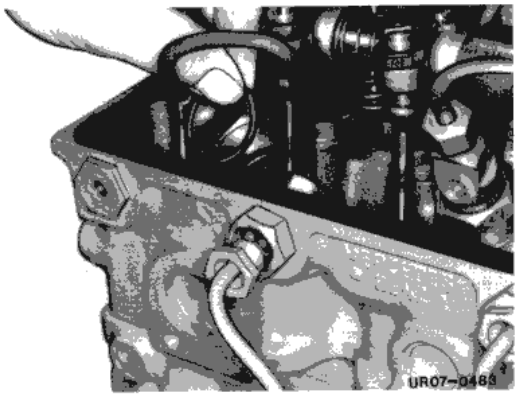

01/554 **3** Insert protective sleeve and tighten to 50... 60 Nm.

346 589 00 07 00

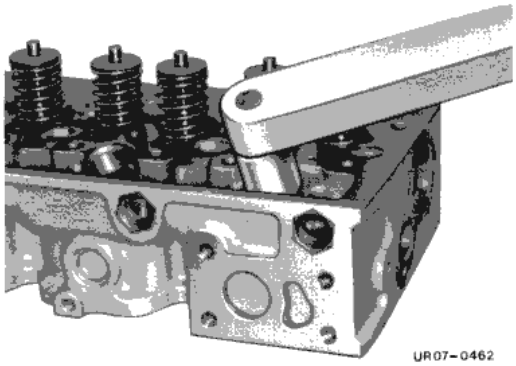

© Daimler AG, 20.04.16, G/07/13, ra0102um10501z, 2-5.1 - Disassembly and assembly of the cylinder head - Engine 300 - Unimog 418/427/437

01/136 **4** Insert new sealing ring for nozzle holder into protective bushing.

01H038 **Note:** The 1,8 to 2,5 mm distance that the nozzle projects over the lower edge of the cylinder head depends on the 1,0 or 1,5 mm thick sealing ring used.

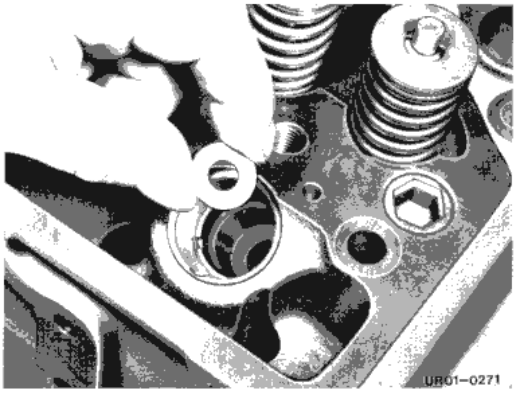

01/137 **5** Introduce nozzle holder and nozzle into cylinder head, observing lock at nozzle holder and groove in cylinder head.

01H039 **Important!**
Do not knock nozzle.

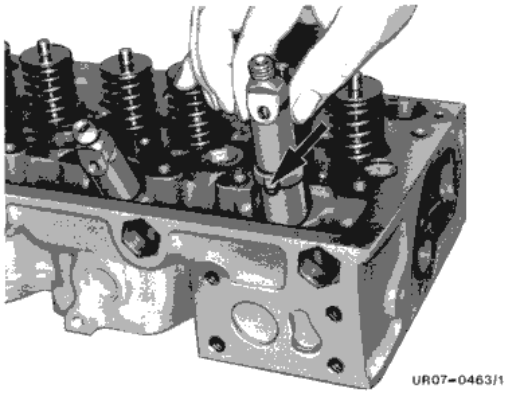

01/555 **6** Tighten thrust bolt for nozzle holder with 60...70 Nm.

000 589 75 09 00

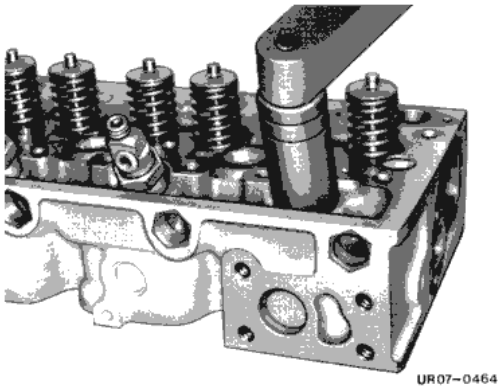

01/556 **7** Install leak oil lines with **new** sealing straps and tighten to 20 Nm. Install screw plug on cylinder head with seaing compound no. 3 and tighten to 10 Nm.

01/145 **8** Attach cylinder head, see **4.1/1** (N 03).

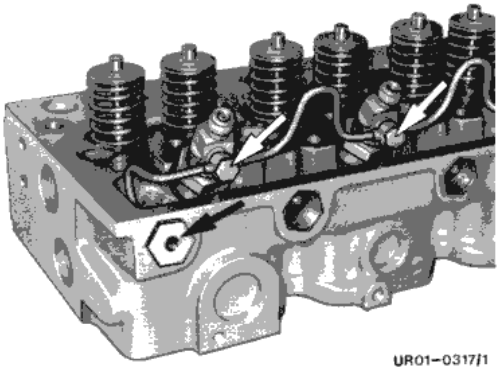

© Daimler AG, 20.04.16, G/07/13, ra0102um10501z, 2-5.1 - Disassembly and assembly of the cylinder head - Engine 300 - Unimog 418/427/437